AIR-GAP/AIR-BREAK

2007 CPC 801.1 TO 801.6

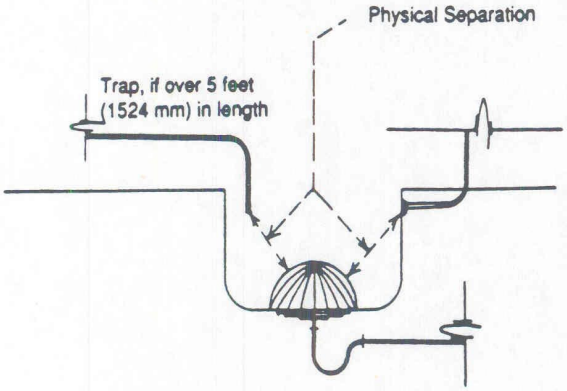

Airbreak

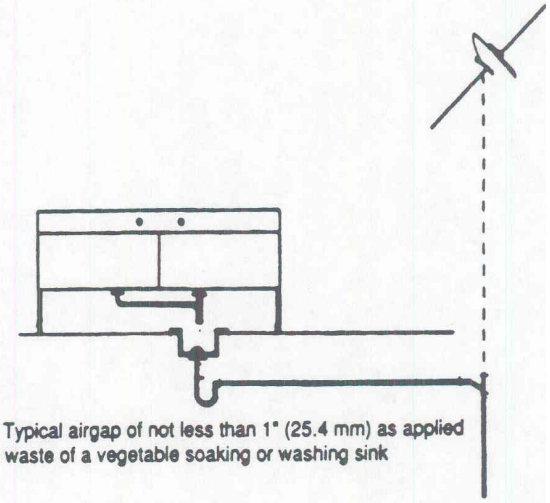

Note: Typical airgap of not less than 1" (25.4 mm) as applied to the waste of a vegetable soaking or washing sink

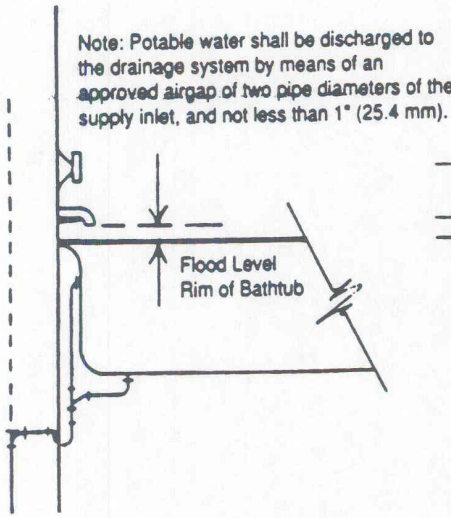

Airgap as Applied to Water Supply

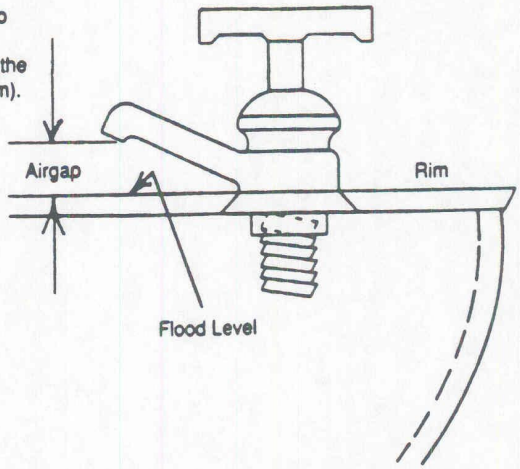

Airgap as Applied to Water Supply